EC16 & DEX16

Elevator Control Panel & Elevator Floor Expansion Board

Compatible with
ZKBio CVSecurity

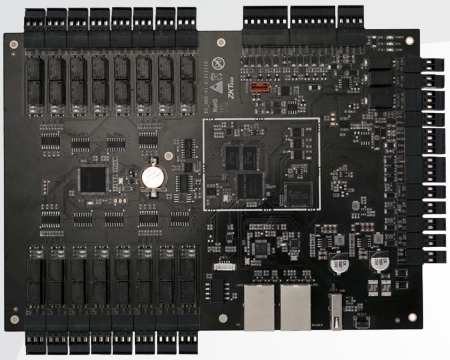

EC16

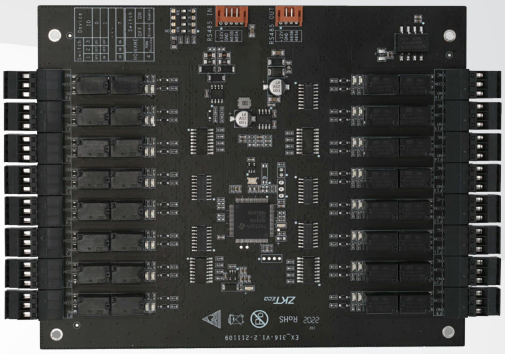

DEX16

EC16 is the second generation of ZKTeco's company elevator control panel. It can support fingerprint and RFID card verification through RS485 direct connection. At the same time, it supports dynamic QR code access and facial recognition, fingerprint recognition through ZKTeco's ZKBio CVSecurity security platform.

Each EC16 can control maximum 16 floors and can be connected up to 7 DEX16 expansion boards. Each DEX16 assists EC16 to manage up to 16 floors, therefore, the EC16 and DEX 16 can control 128 floors in total, covering most of the market demand.

In addition, EC16 can be integrated with ZKBio CVSecurity which promotes the elevator security to a new level. The multi-time schedule can set a restriction on elevator entering designated floor at different time for different users. Yet, the lift direct access function can ensure only those who are authorized to gain access right passage to the assigned floor at a designated time. Once the identity authentication of elevator passengers is successful, the elevator will dispatch the elevator passengers to their destination.

Features GL Exclusive Feature

- Maximum 128 Floors of Elevator Control (EC16 + DEX 16)
- Multiple Communication Modes□ TCP/IP, USB
- Direct Access to Designated Floor After Positive Verification
- Advanced Data Security Standard (Communication encrypted with AES256 and TLS1.2)
- Multi-credential Authentications (Fingerprint, RFID, Dynamic QRCode, and Facial Recognition[KF1100/1200]
- EC16 & DEX16 are equipped with 16 dual relay outputs
- Supports Multi-time Schedule

Specifications (G : GL Exclusive Feature)

Model:
EC16

Capacity:

Fingerprint:	30,000
Card:	100,000
Transactions:	200,000

Communication
G TCP/IP, USB Host, Wiegand, RS485*

Floor Button Control Relay
16 Dual Relay

Number of Ports
2 TCP/IP, 2 Wiegand (26/34/66 bits),
1 RS485 (OSDP), 1 RS485 (expansion board),
1 Open, 1 close, 1 AUX output,
1 AUX in, 1 voice output(coming soon),
1 LED Output(COMMRUN/PWR/GND),
1 FIRE,1 Emergency, 1 Power in,
1 USB 2.0 port

Additional Info
Dimension(L*W)□165*230mm
Operating Temperature: -20°Cto 55°C
Storage Temperature: -25°C to 65°C
Operating Humidity: 10%to 90%RH
G Data Protection: AES256, HTTPS, TLS1.2

Special Functions
Protocol: ZKTeco A & C Push
Supported QRCode Reader : QR500/600 Series
RS485 address Set by DIP switch
G Max Supported Expansion Board: 7pcs (DEX16) over RS485

Certifications
G CE, FCC, ISO9001, ISO14001

Compatibility
ZKBio CVSecurity

Power Supply
DC 12V 3A

Model:
DEX16

Floor Button Control Relay
16 Dual Relay

Number of Ports
1 RS485 IN,
1 RS458 OUT

Communication
RS485(OSDP)

Additional Info
Communication to EC16 : RS485
Operating Temperature :-20°Cto 55°C
Storage Temperature: -25°C to 65°C
Operating Humidity:10%to 90%RH
Dimension(L*W):165*132mm

Certifications
CE, FCC, ISO9001, ISO14001

Power Supply
DC 12V 1A

* Note: RS485 is for RS485 readers.

Configuration

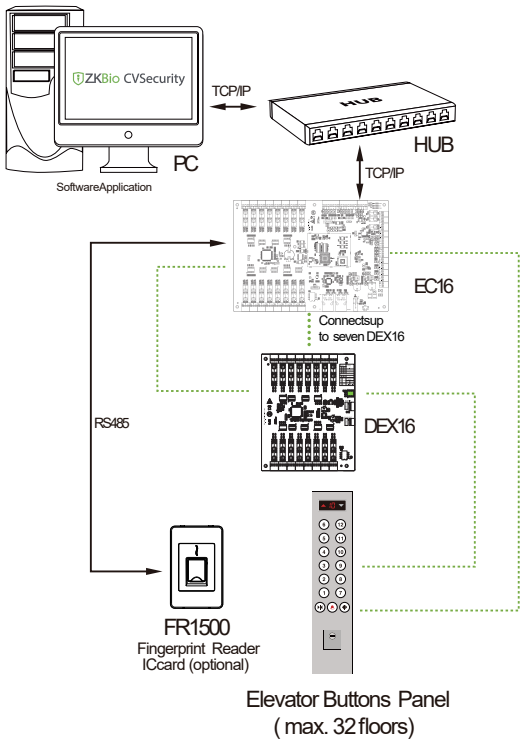

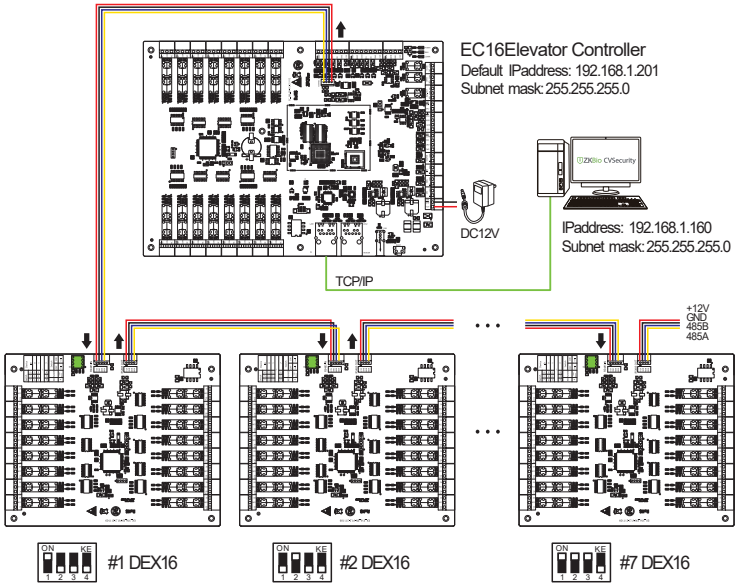

Dimensions (mm)

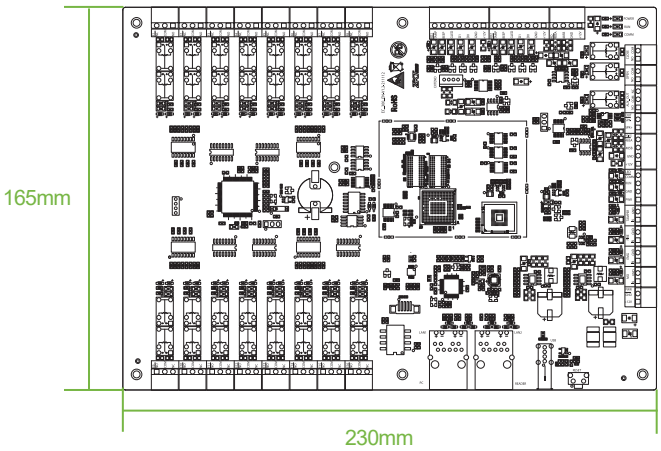

EC16

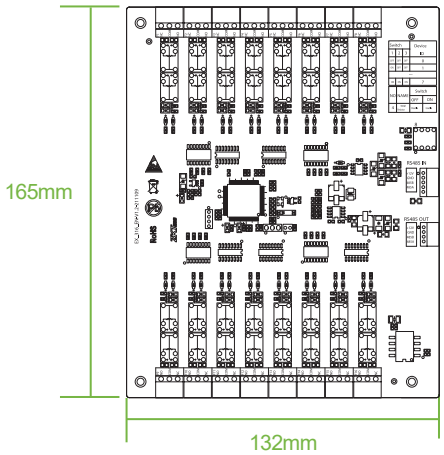

DEX16

Email: sales@vshgroup.com.my Website: www.vshgroup.com Tel: +603-8066 8482 Hot Line: +6019-348 1168